STIEBEL ELTRON

SHP-0 Premium Hot Water Heat Pump

High efficiency, low impact — R290 refrigerant and WiFi control

Climate Friendly with Maximum Savings

This sleek, reliable heat pump delivers efficient hot water while reducing the reliance on traditional element storage or gas fossil fuel by harnessing ambient air heat. It uses eco-friendly R290 refrigerant and maximises energy savings, which can be even further extended when combined with a solar PV generation. With built-in WLAN connectivity, you can monitor & control remotely via the MyStiebel App. Installers can also adjust settings via the Servicewelt App, often without the need for a site visit. With over 50 years of Heat Pumps, you can trust STIEBEL ELTRON and European engineering.

Product features

- 200L or 300L variants
- R290 refrigerant with low GWP
- Control & monitor via MyStiebel App
- Installer control via Servicewelt App
- Operates to -10°
- Solar PV compatible (up to 75°)
- Quiet operation
- Hygiene program
- Timer controls

Warranty

- 7 years cylinder
- 5 years sealed refrigeration circuit
- 2 years all other components

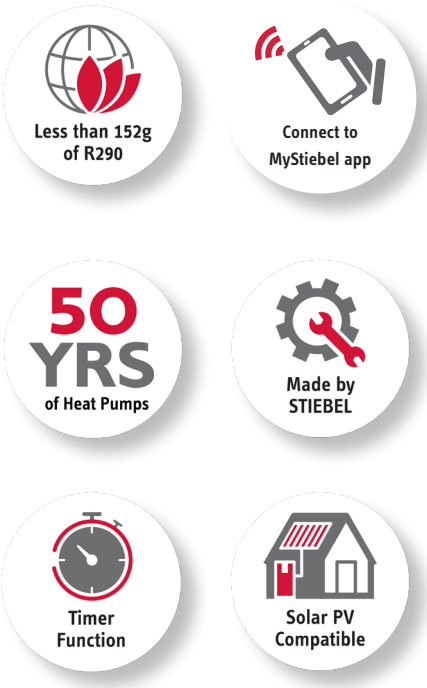

Intelligent Control

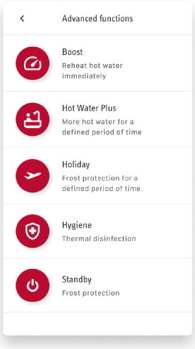

Advanced Functions

Water Comfort

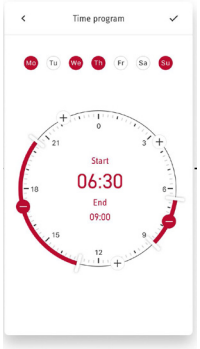

Time Program

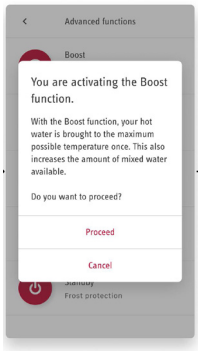

Boost Mode

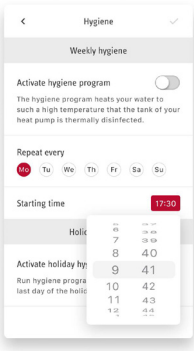

Hygiene Cycle

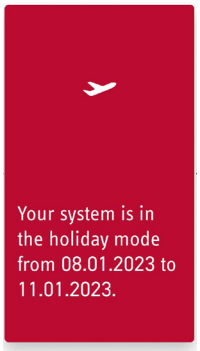

Holiday Mode

STIEBEL ELTRON

STIEBEL ELTRON

Download on the App Store

GET IT ON Google Play

SHP-O 201/301 Premium

HOT WATER HEAT PUMP

Type		SHP-O 201 Premium	SHP-O 301 Premium
Article no.		207264	207265
Active defrost		Yes	Yes
Height x diameter	mm	1478 x 650	1903 x 650
Weight (empty)	kg	98	117
Weight (filled)	kg	304	422
Nominal capacity	L	200	300
Min/Max application limits		-10 - +43°C	-10 - +43°C
Power supply		1/N/PE 220-240 V 50 Hz	1/N/PE 220-240 V 50 Hz
Average power consumption, heat pump (230 V) (A19/W15-61 I AS/NZS 5125.1)	kW	0.45	0.44
Auxiliary heater power consumption	kW	1.5	1.5
Max. operating current v	A	9.88	9.88
Hot water outlet		G 1	G 1
PTR valve	kPa	850	850
Energy efficiency class		A+	A+
Refrigerant		R290 (152g)	R290 (152g)
GWP		0.02 (IPCC)	0.02 (IPCC)
Timer		Functionality via app	Functionality via app
Average sound pressure level at 2m distance, free field (EN 12102)	dB(A)	47	47
COP (EN16147 / A20)		4.27	4.21

Need Something larger?
See our Ground & Air Source Heat Pumps

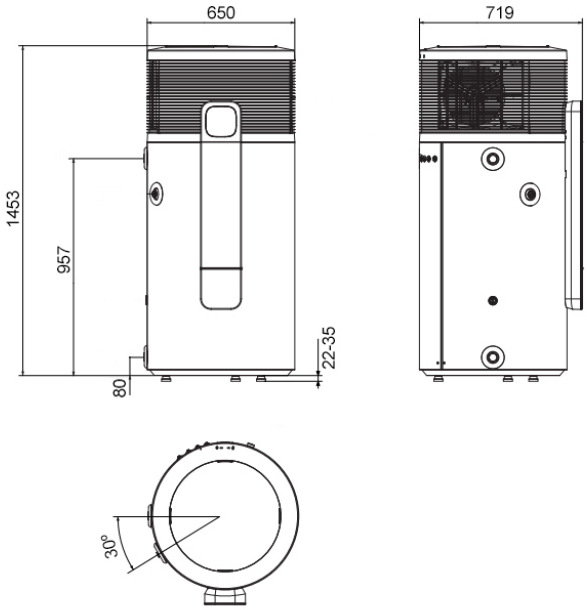

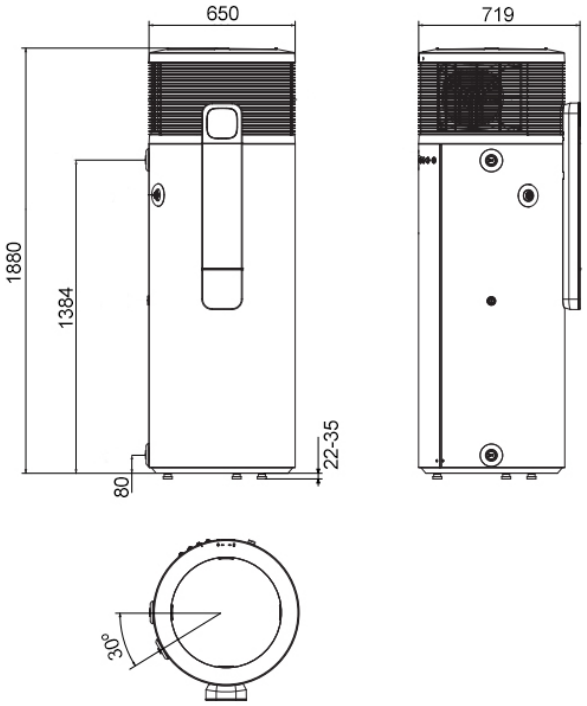

Visit our website to view our range of heat pumps

stiebel-eltron.co.nz/heat-pumps
09 486 2221

STIEBEL ELTRON is committed to our policy of continual improvement, some features may have subsequently been changed or even removed.
Our advisors will be happy to consult with you regarding the currently applicable equipment features. The images used in this data sheet are for reference only.